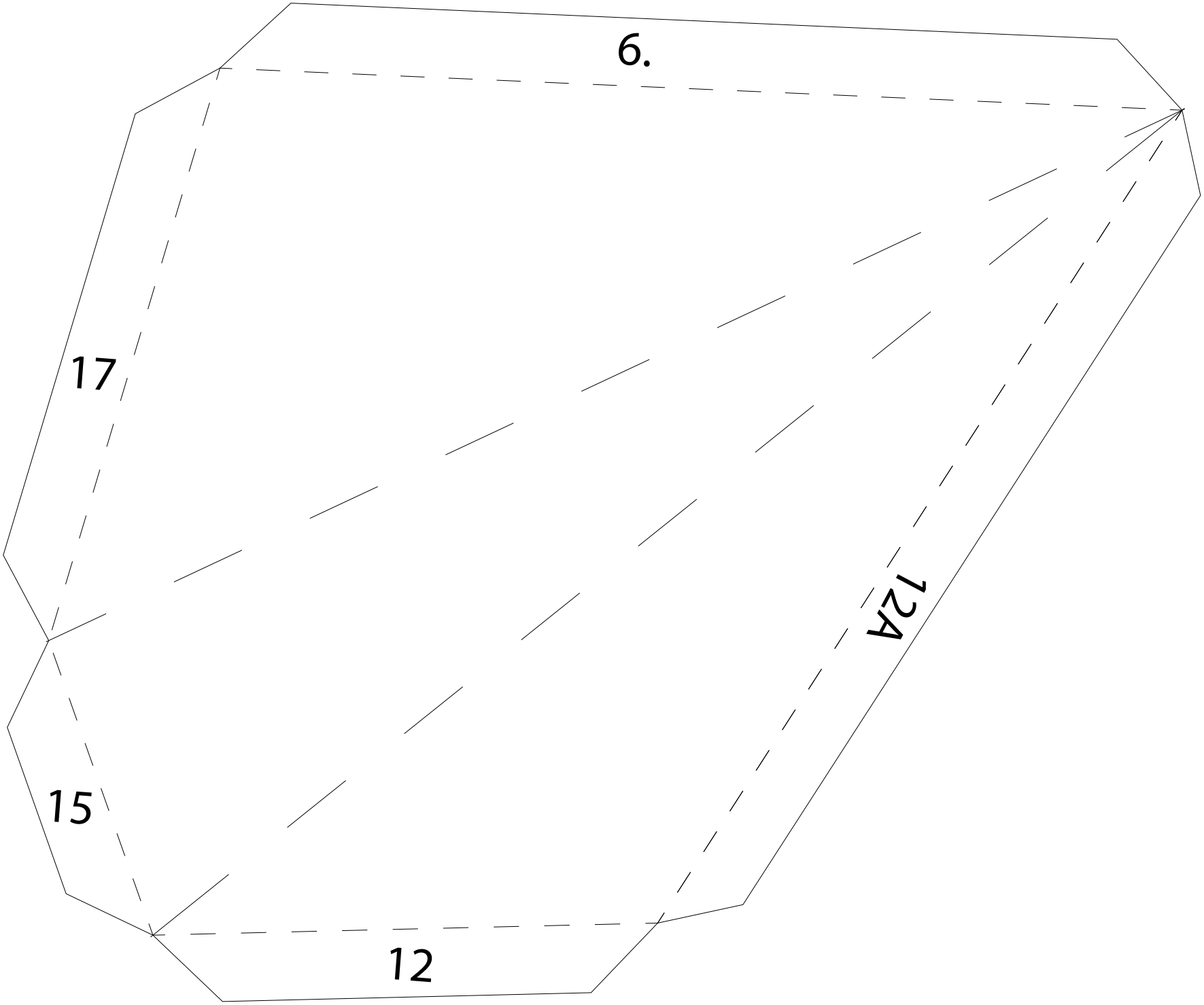

© Printables by studio Renate

© Printables by studio Renate

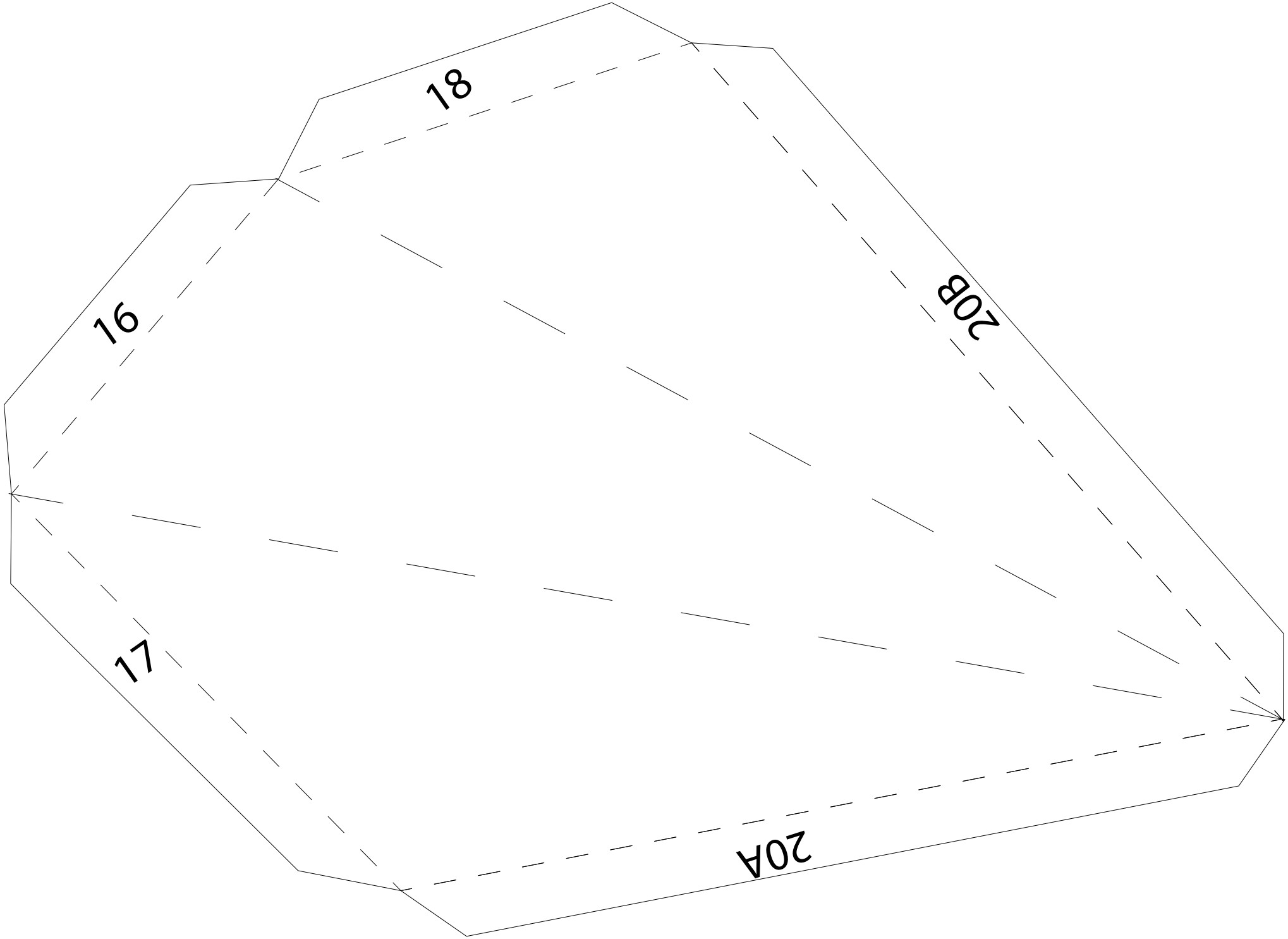

© Printables by studio Renate

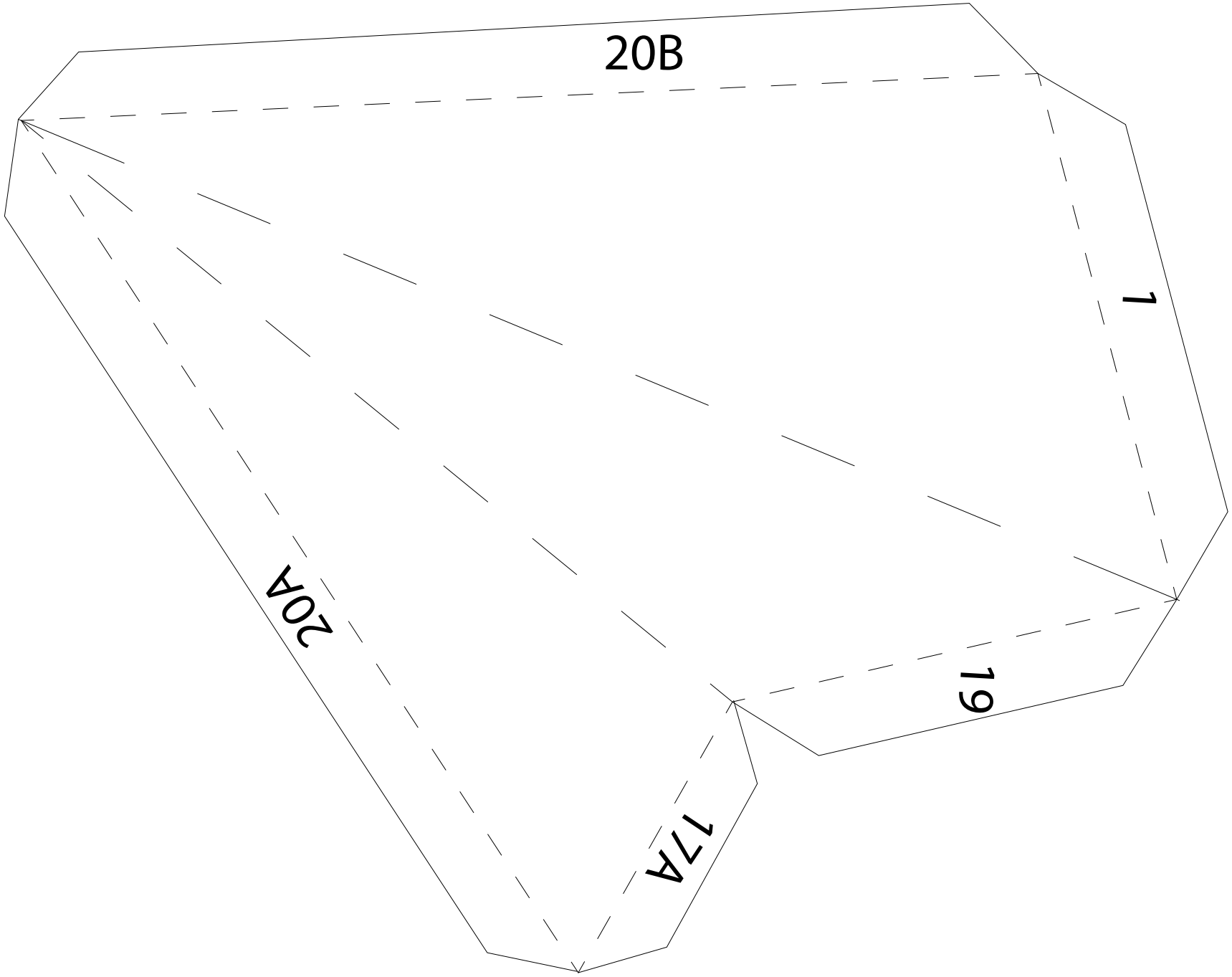

© Printables by studio Renate

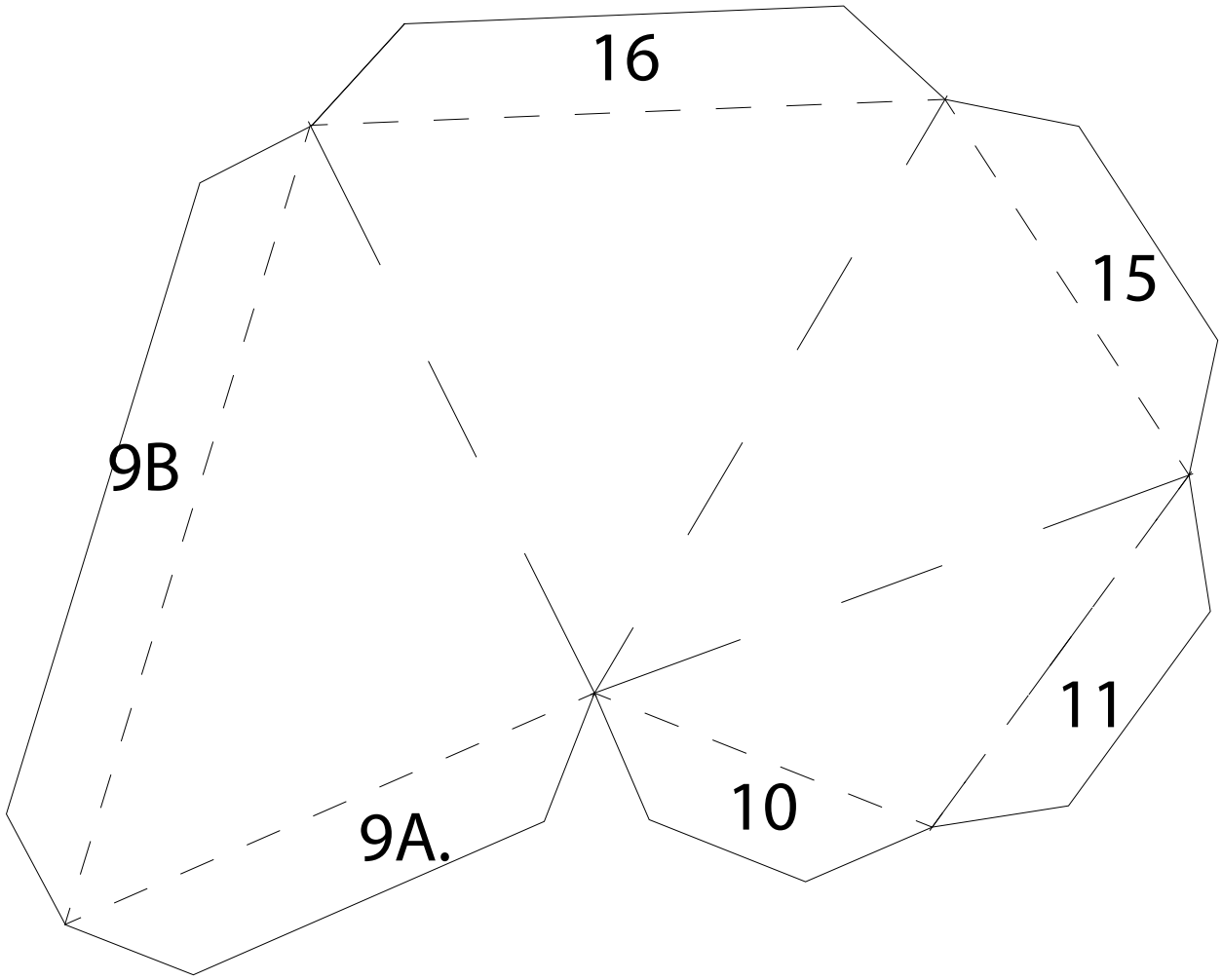

© Printables by studio Renate

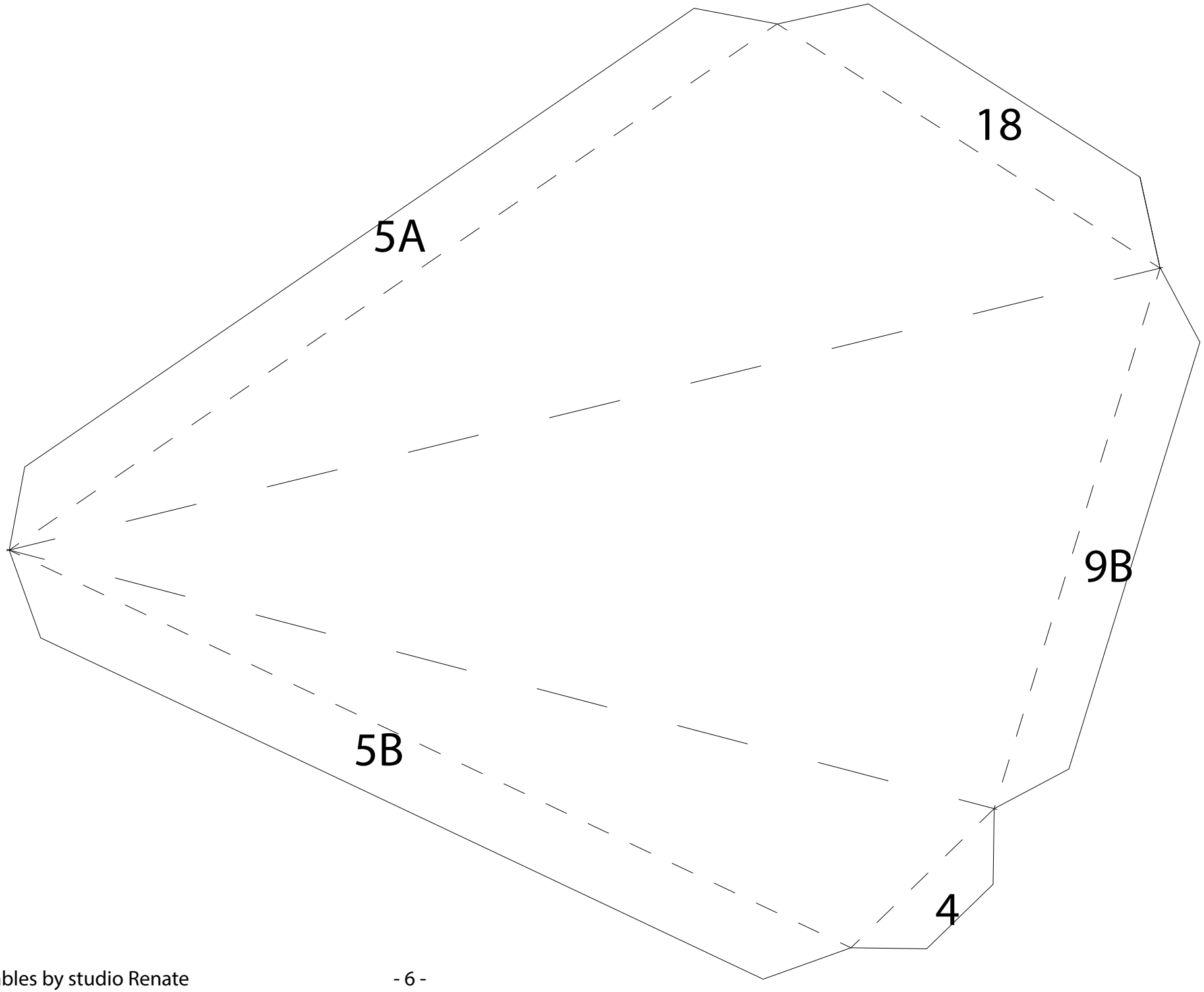

© Printables by studio Renate

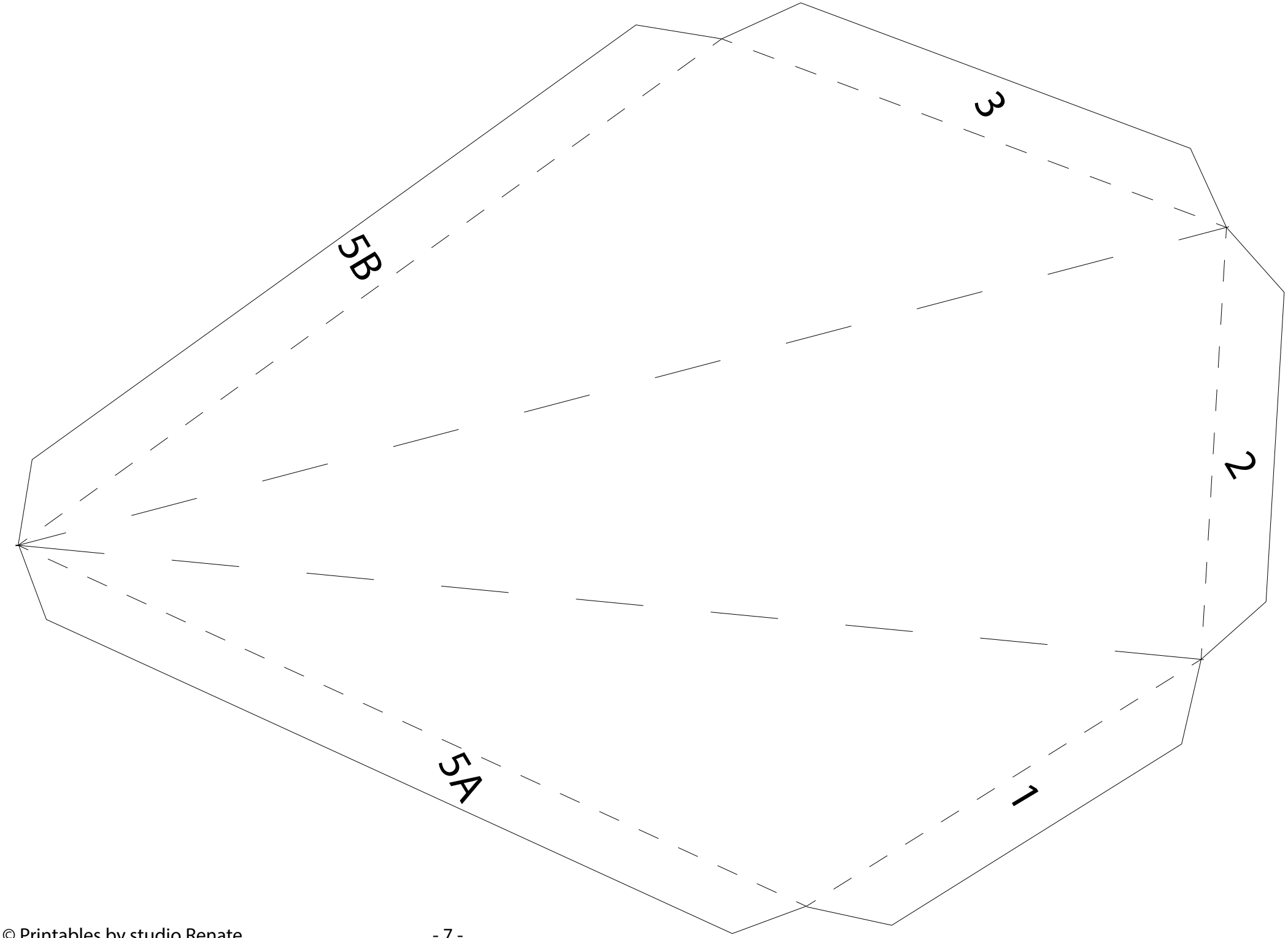

© Printables by studio Renate

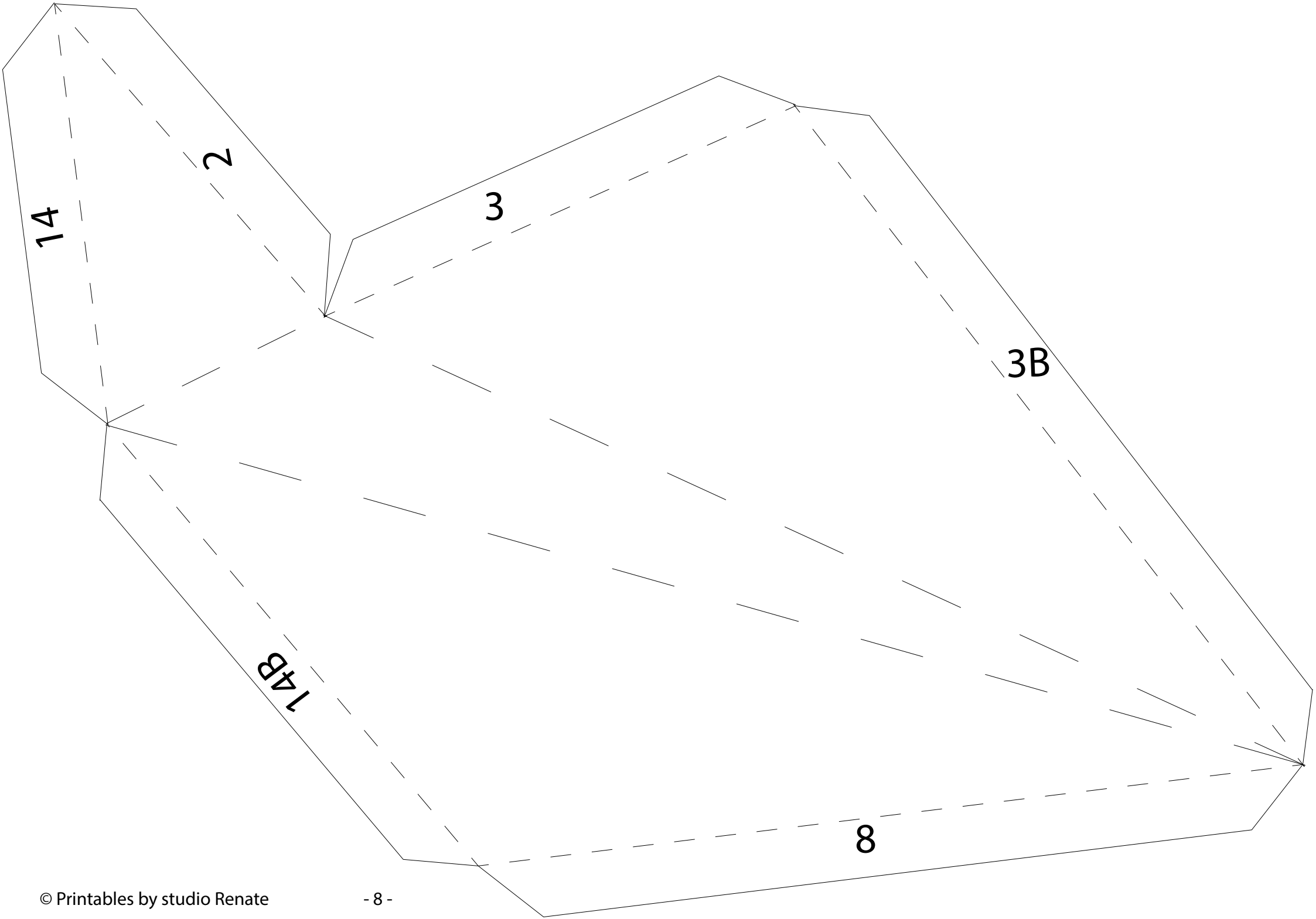

© Printables by studio Renate

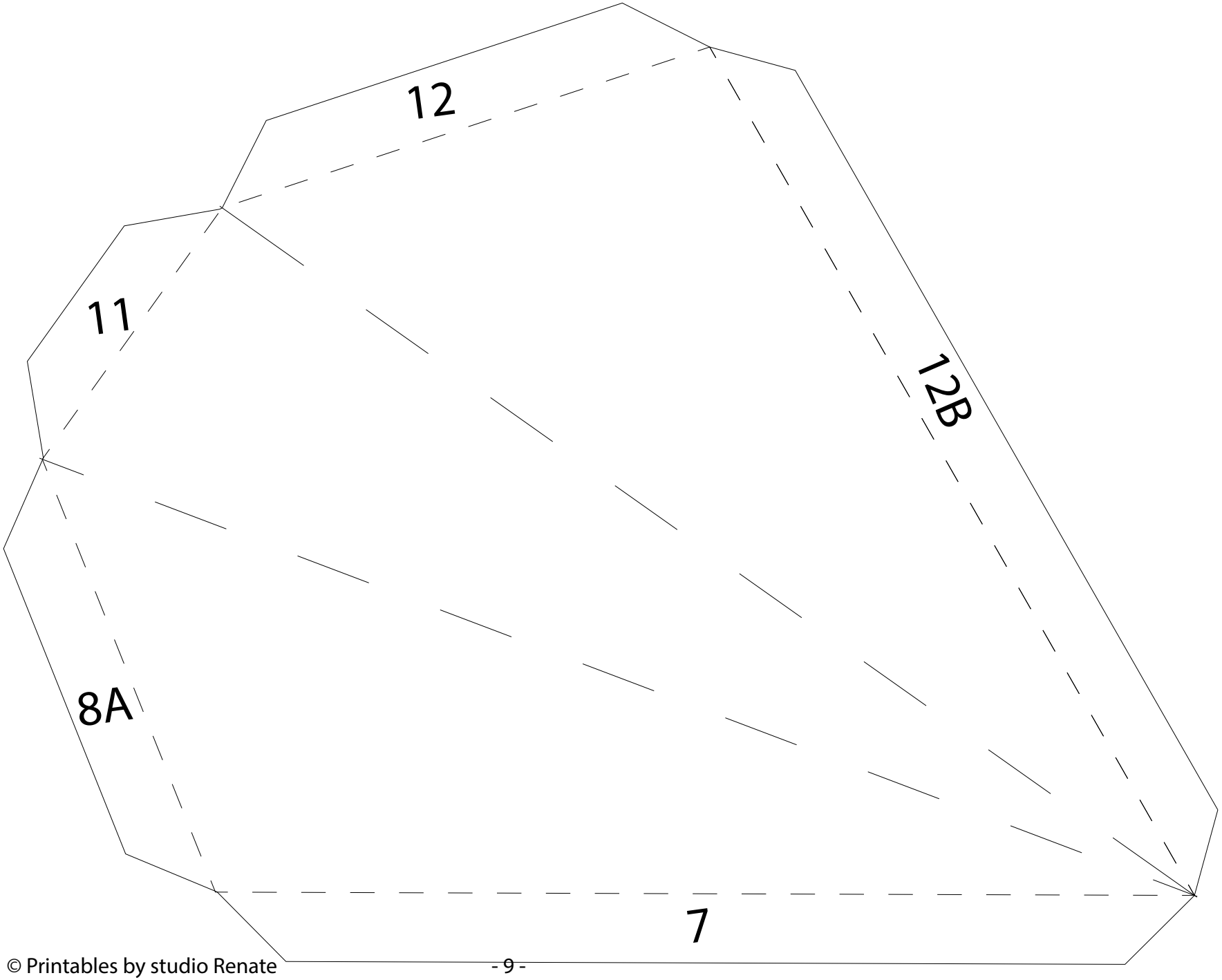

© Printables by studio Renate

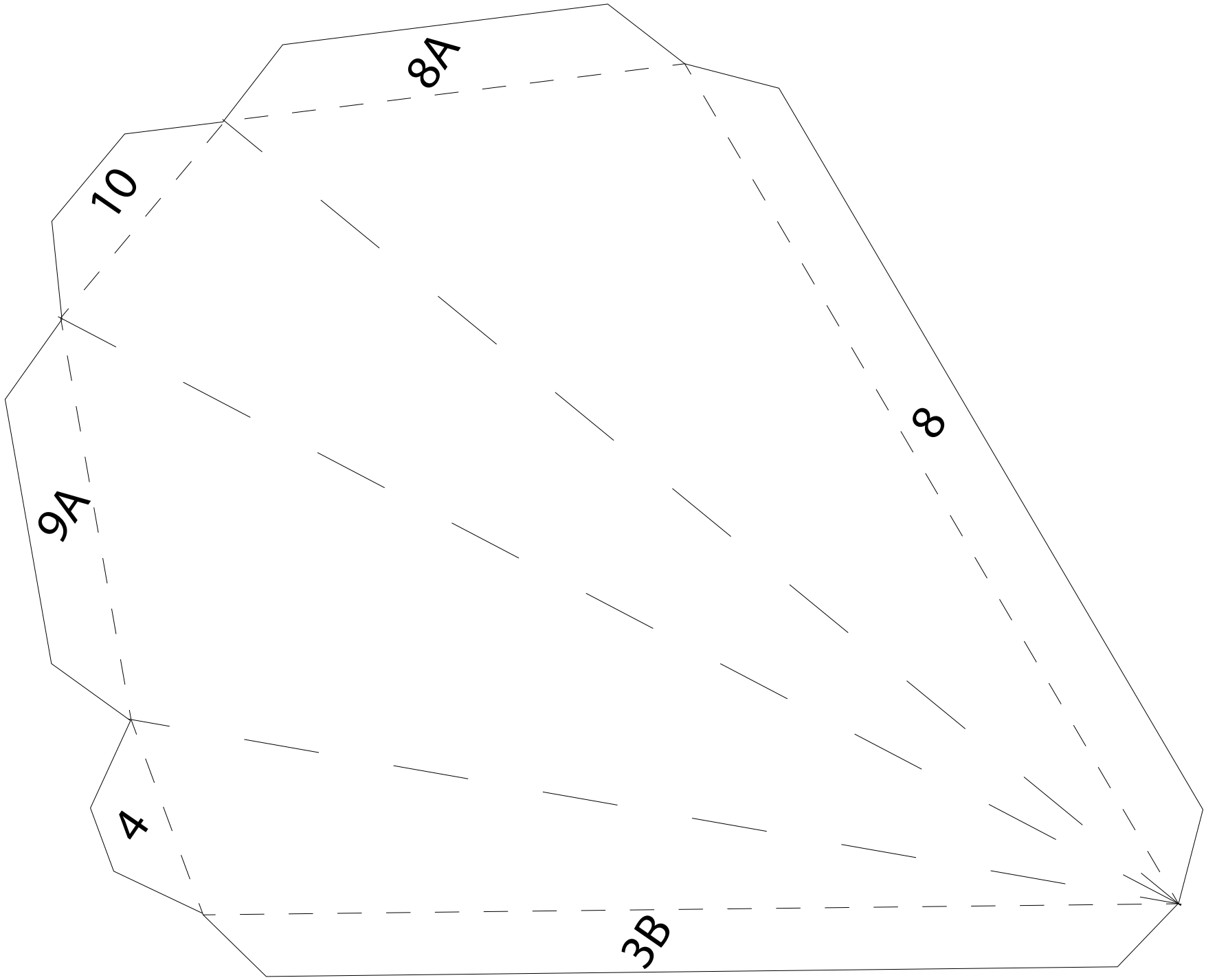

© Printables by studio Renate

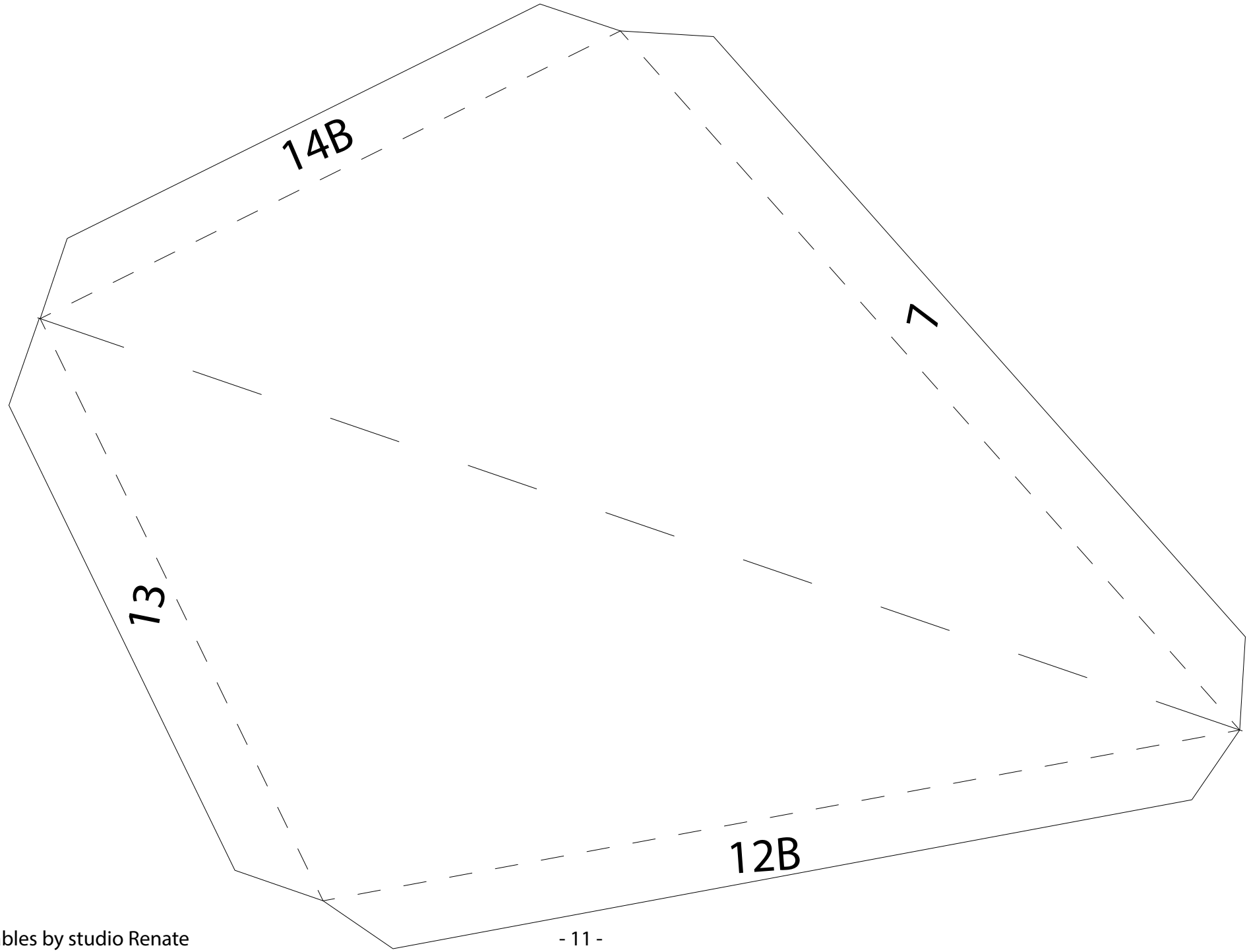

© Printables by studio Renate